MESON AB

HIDRANT SUBTERAN TIP HS
UNDERGROUND HYDRANTS HS TYPE
PN10 DN 65, 100

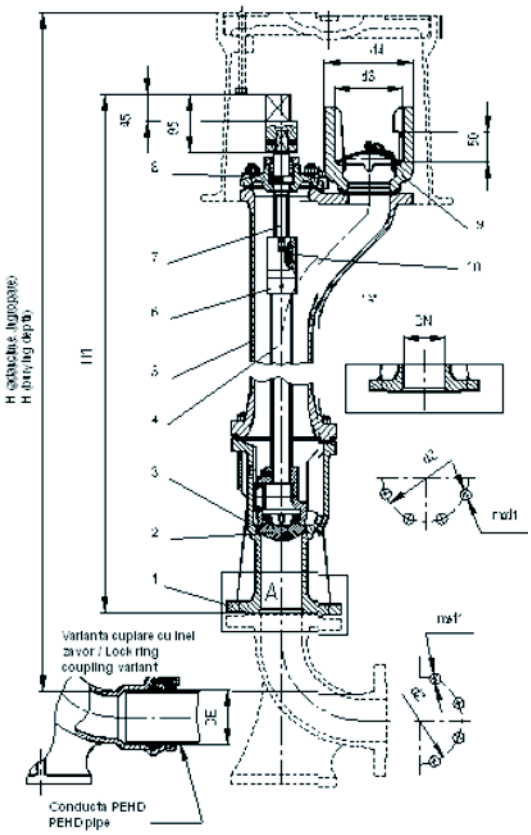

Produs omologat de COMANDAMENTULPOMPIERILOR
Product approved by ROMANIAN FIREMEN COMMITTEE

POZ. ITEM	REPER PART NAME	MATERIAL / MATERIAL TIP TYPE	SIMBOL SYMBOL
1	Cutie obturator Obturator box	fonta cenusie / cast iron	EN-GJL-250
2	Obturator / Obturator	cauciuc / rubber	EPDM
3	Inel / Ring	aliaj Cu / copper alloy	-
		fonta cenusie / cast iron	EN-GJL-250
4	Teava de legatura Connecting pipe	otel carbon / carbon steel	-
5	Corp / Body	fonta cenusie / cast iron	EN-GJL-250
6	Suport piulita Nut support	fonta cenusie / cast iron	EN-GJL-250
7	Tija / Stem	Inox min. 11,5%Cr stainless steel min. 11,5%Cr	-
8	Capac / Bonnet	fonta cenusie / cast iron	EN-GJL-250
9	Racord ghiara Jaw connection	fonta cenusie / cast iron	EN-GJL-250
10	Piulita tijei Stem nut	aliaj Cu / copper alloy	-
	Garnituri / Gaskets	cauciuc / rubber	EPDM
	Organe de asamblare Bolting	otel carbon / carbon steel	-

CARACTERISTICI CONSTRUCTIVE / DESIGN CHARACTERISITICS:
-constructie/ design: STAS 695;
-adancimi de ingropare/ burying depths: 1m ; 1,25m ; 1,5m ;
-flanse de legatura / connecting flanges : PN10, EN 1092-2 ;
ISO 7005-2 ; DIN 2501 ;
-cuplare conducte PEHD / pipe connection PEHD : DE75 ; DE90 ptr./for DN65 ;
DE110 ; DE125 ptr. /for DN100
-viteza de curgere / flow speed : 3m/s ;
-etansare tija / stem sealing: inele O / O ring ;

(dimensiuni in mm / dimensions in mm)

DN	DE PEHD	Dimensiuni de gabarit Overall dimensions			Dimensiuni flansa legatura retea System connecting dimensions		Dimensiuni racord ghiare Jaw connection		Masa neta / Net weight (≈kg)			ξ Rata scaparii head loss factor
		DN flansa racord retea DN of system connecting flange	H	H1	nxd1	d2	d3	d4	Hidrant Hydrant	Cutie protectie Protection box	Cot Foot elbow	
65	75; 95	65	1000	730	4x19	145	90	115	44,5	30,7	16	2,8
			1250	980					48,o			
			1500	1230					52,5			
		80	1000	730	8x19	160	90	115	45,2		16	
			1250	980					49,2			
			1500	1230					53,2			
100	110 125	100	1000	730	8x19	180	128	150	70,5	46,5	32,0	3,2
			1250	980					76,0			
			1500	1230					83,5			

Pentru confirmare va rugam folositi fisa tehnica contractuala / For confirmation, please use the technical sheet of agreement FTC14

Ne rezervam dreptul de a modifica dimensiunile sau greutatile in functie de evolutia tehnica.
Rights reserved to modify dimensions or weights depending on the technical evolution.